Alltrax Inc
1111 Cheney Creek Rd
Grants Pass, Or, 97527
Direct: 541-476-3565
Fax: 541-476-3566

Alltrax XCT and SR motor controllers for EZGO XCT for DCS/PDS/TXT and TXT-48V or SR for SERIES Mounting Adapter

File: DOC113-010-D_KIT-UNIV-ADAPTER-EZGO Install.pdf on EC-07142016

ALLTRAX PN: KIT-UNIV-MNT-EZGO (for SR-SERIES, PDS, DCS, and TXT 48 with heatsink)

The XCT and SR Universal Mount Adapter provide a simple solution to mount the Alltrax products without drilling holes and include hardware. Hardware enclosed includes the ABS+PC plastic adapter, SAE "Flat head Socket Cap Screws" for flush mount bolts (x3) and the 4x bolts, 4x nuts, and 4x washers to mount the controller. The procedure is about the same for XCT and SR controllers as their housings are identical.

For the EZGO, another option includes the SOLENOID MOUNTING BRACKET with hardware to mount the STOCK, MZJ200 (for 300 & 400amp controllers), White Rogers WR586, or MZJ400 style (for 500amp controllers).

- XCT install: The Solenoid bracket ,mounts the SOLENOID and the TOW/RUN switch.
- SR install: The Solenoid bracket only mounts the SOLENOID (no TOW/RUN switch on series carts).

STEPS:

1. Disconnect positive battery terminal.

2. XCT ONLY: At the controller, cut off the two yellow OEM faston quick terminals on the MOTOR field 10AWG wires (BLK and GREEN). Using the the ¼" supplied ring terminals, crimp using the appropriate crimper to ensure a solid connection.

3. Remove the old controller, solenoid bracket, and tow/run switch from the cart (retain all hardware if you wish to return the cart to OEM)

4. **Insert the 4 HEX NUTS** (1/4-20 nuts) into the adapter as shown. The nuts are on the BACK SIDE of the mounting adapter plate. The Nyloc plastic faces out, press them flush with the surface. **If the nuts are loose, use scotch tape to hold them in place. (Some hardware is tight, some may be loose…)**

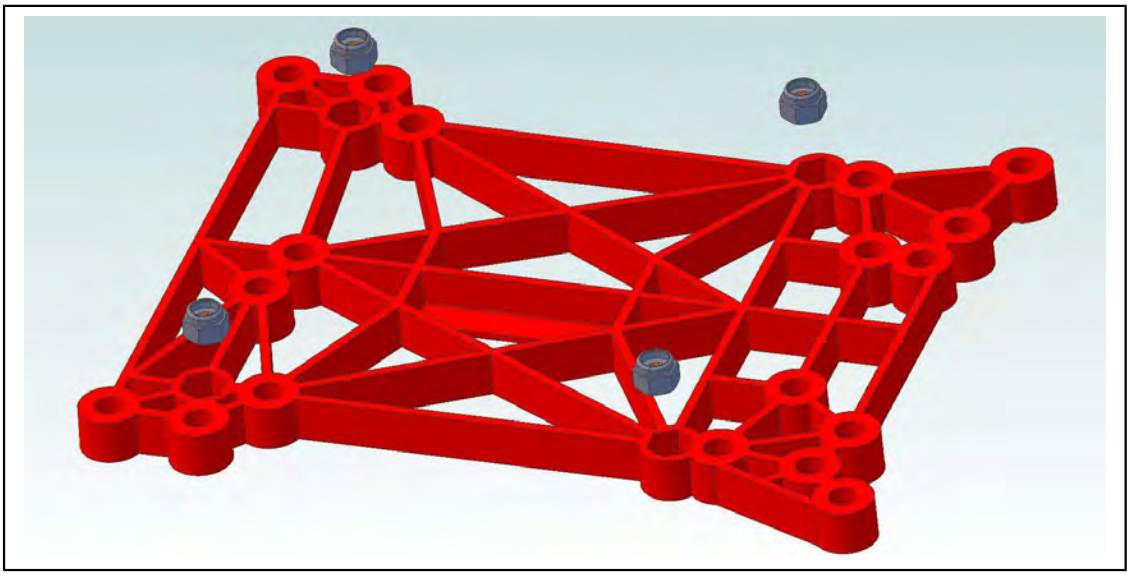

© Alltrax Inc. 2016
All Rights Reserved

INSTALL OPTIONS – HI /or/ LOW MOUNT.

The stock EZGO heat-sink has a controller with three mounting threaded holes in a triangle. Two lower and one upper center. There is also a triangle set of holes that are opposite and NOT threaded, one lower center and two upper. Flipping the orientation moves the Alltrax controller upwards or downwards depending on the solenoid mounting bracket location and needed clearance to the seat bottom.

- **OPTION 1**: **SR-SERIES and all XCT for DCS, PDS** carts use the NON THREADED holes and self-tap the screw holes using the supplied threaded self-tapping ¼-20 screw. (See note TXT-48V)
- **OPTION 2**: **XCT for TXT-48V** uses the stock THREADED heat sink holes – the bracket only holds the TOW/RUN switch. The TXT-48V solenoid is mounted on the bottom deck in its own bracket.

The KIT-UNIV-ADAPTER-EZGO includes 1-screw, a 1/4'-20 self tapper that can be used to thread these holes to mount the controller lower on the heat-sink where it should be.

NOTE TXT-48V:

If you have a **TXT-48V** and wish to use an **"aftermarket heavy duty solenoid"** mounted to the bracket shown below (instead of the deck mounted stock location), **then USE OPTION 1** – THREAD the new holes. This positions the controller lower to fit the main SOLENOID and TOW/RUN switch on the bracket and clear the seat.

Option 1 LOW MOUNT
THREAD the holes using the provided self tapping ¼-20 Bolt.
This is THE PREFERRED METHOD the controller mounts lower onto the heatsink to clear the seat bottom

Option 2 – HI MOUNT
Use existing threaded holes WITHOUT SOLENOID – bracket holds only TOW/RUN switch (TXT-48V only)

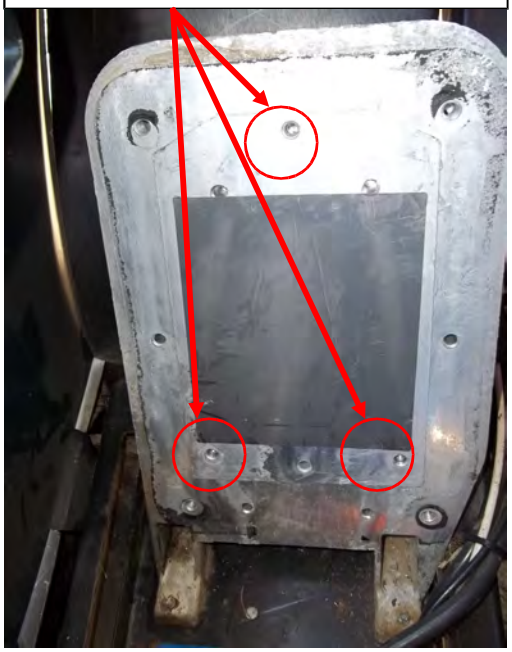

© Alltrax Inc. 2016
All Rights Reserved

1. OPTION 1: All SR and XCT for EZGO with SOLENOID

This option assumes the solenoid is mounted on the included bracket. The TOW/RUN is also mounted for XCT Regen carts.

AFTERMARKET SOLENOID MOUNTED ON THE CONTROLLER BRACKET:
MUST USE THE OPTION 1!

1. **For XCT ONLY (SR Series carts do not have a tow run).** Rotate the TOW/RUN Wires to face DOWNWARD and install onto SOL BRACKET

SR Does NOT have the Tow Run switch

2. Use the supplied disposable ¼-20x3/4" SELF TAPPING SCREW to tap the three holes in the heat sink as shown. Drill in and back out several times to cut new threads. (or - use a ¼-20 SELF TAPPING BIT).

Option 1 LOW MOUNT
THREAD the holes using the provided self-tapping ¼-20 Bolt.
This is THE PREFERRED METHOD
the controller mounts lower

© Alltrax Inc. 2016
All Rights Reserved

3. **USE GREASE on the 3X Stainless socket head cap screws threads to prevent binding** (i.e. counter sunk screws). The ALLTRAX LOGO will be facing you upside right shown below. (You can properly read it from the drivers side). Install and tighten the three ¼-20-1" SAE FLAT HEAD cap screws into the plate. Do not over tighten.

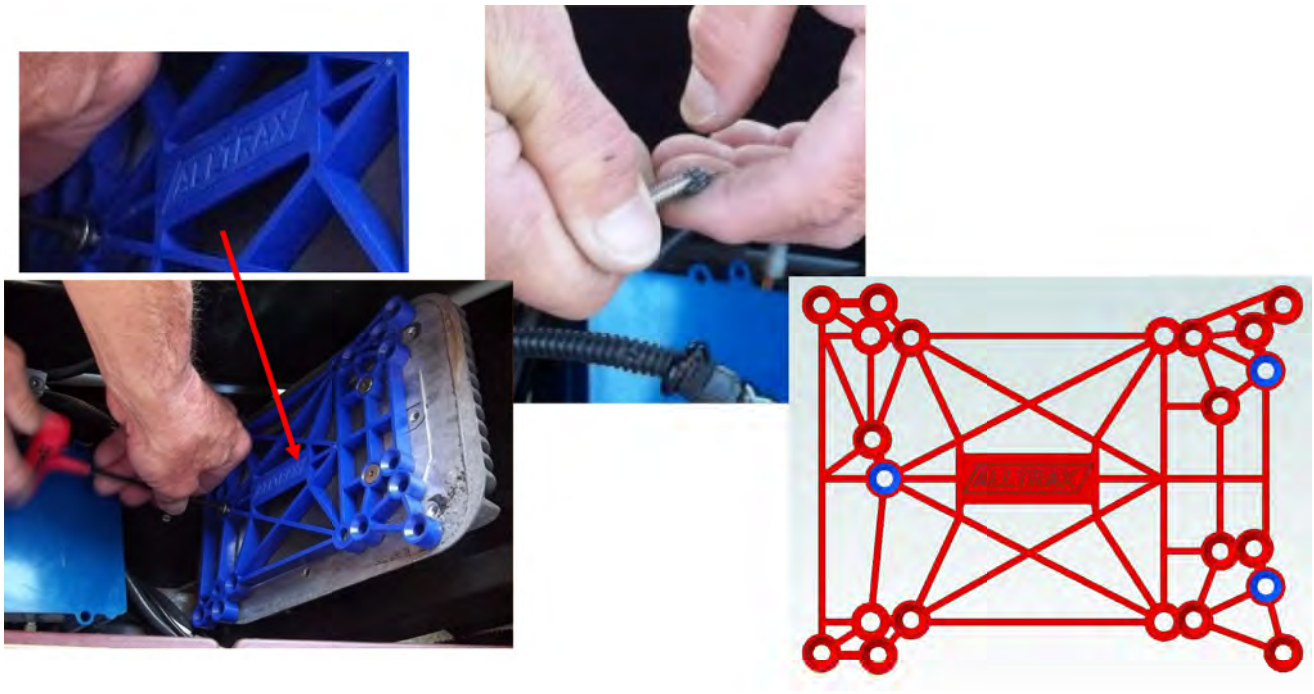

4. Mount the SOLENOID (MZJ400 shown) to the bracket using the supplied #10-32 nuts, flat washers, and split lock washers. NOTE for PDS, DCS, and TXT48 the TOW-RUN switch is to the LEFT SIDE of the bracket.

© Alltrax Inc. 2016
All Rights Reserved

5. Install the MOUNTING BRACKET onto the controller in the TWO WIDE format holes with 1-1/2" long bolts from the BOTTOM of the controller facing UPWARDS.

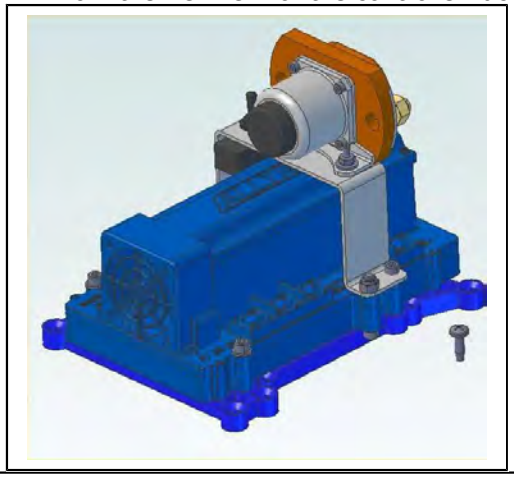

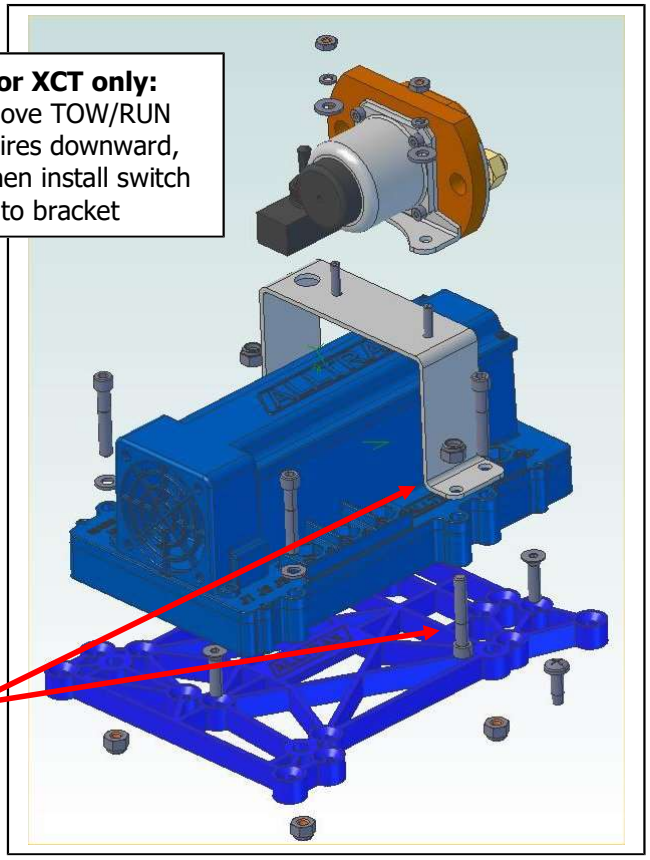

For XCT only:
Move TOW/RUN wires downward, then install switch into bracket

6. **USE GREASE on the 4X socket head cap bolt threads to prevent binding in the aluminum heatsink**. Mount the controller to the plate with the 4 mounting bolts, use the supplied small diameter flat washers on the bolts to protect the plastic controllers mount lugs. Do not over tighten bolts!

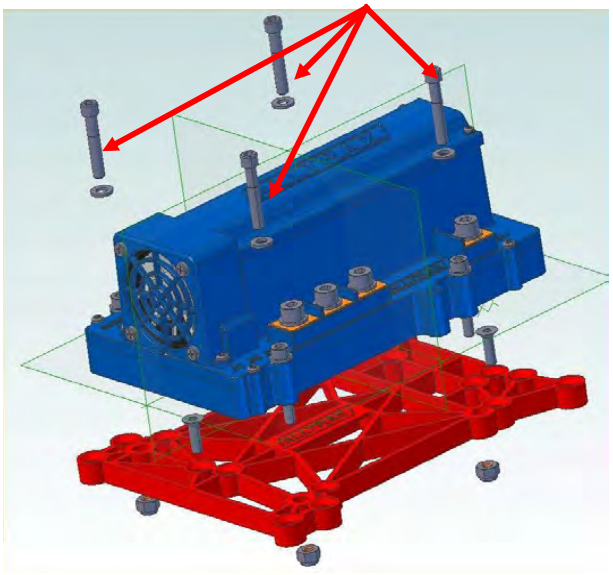

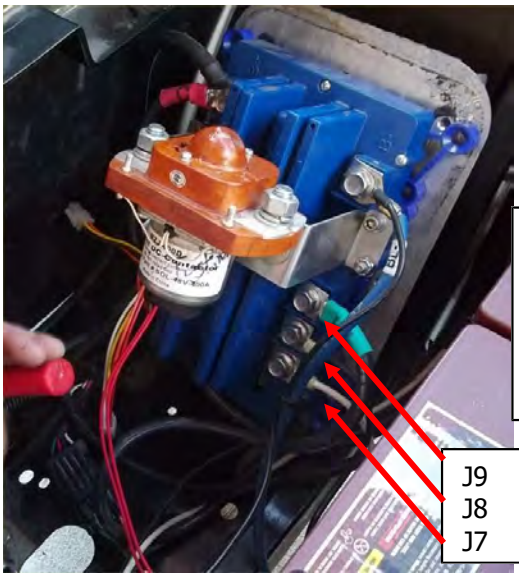

J9
J8
J7

WIRING:
SR M- = J7

XCT M- = J9
XCT F2 = J8
XCT F1 = J7

© Alltrax Inc. 2016
All Rights Reserved

2. OPTION 2: TXT 48V ONLY – NO SOLENOID ON BRACKET

This option assumes the solenoid is mounted on the floor of the cart in its own bracket.

IF YOU ARE USING AN AFTERMARKET SOLENOID MOUNTED TO THE CONTROLLER BRACKET PROCEED BACK TO OPTION 1

1. Rotate the TOW/RUN Wires to face DOWNWARD and install onto SOL BRACKET

2. Install the MOUNTING BRACKET onto the controller in the TWO WIDE format holes with 1-1/2" long bolts from the BOTTOM of the controller facing UPWARDS.

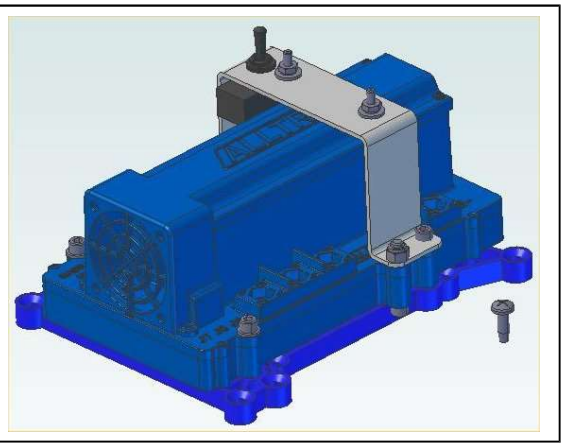

Install mounting bolt from bottom through the controller and TOW/RUN bracket

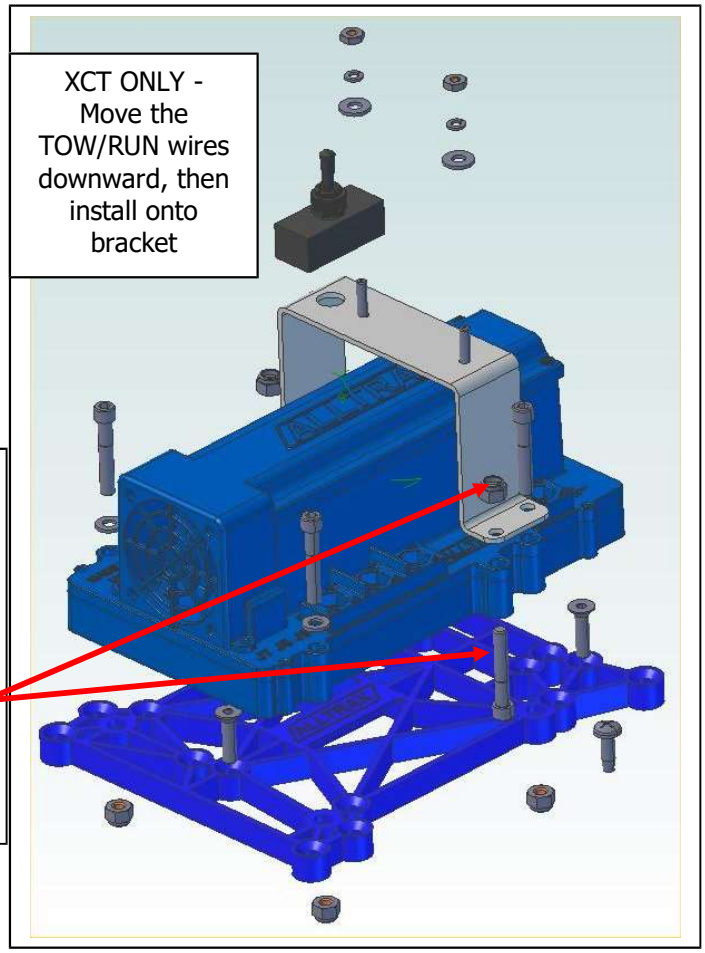

© Alltrax Inc. 2016
All Rights Reserved

3. Install the adapter plate onto the heat-sink mounting plate with the 4x NUTS "against the carts heat sink". The 4X controller bolts holding the controller go "through the adapter" into the nuts on the back side.

4. **USE Petroleum GREASE on the 3X Stainless socket head cap screws threads to prevent binding** (i.e. counter sunk screws). The ALLTRAX LOGO will be facing you upside down shown below left. Install and tighten the three ¼-20-1" SAE FLAT HEAD into the plate. Do not over tighten.

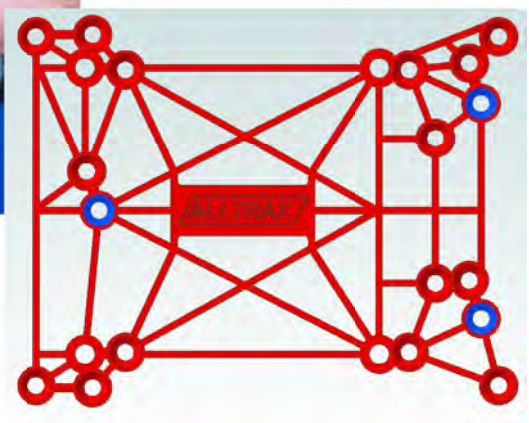

5. **USE Petroleum GREASE on the 4X socket head cap bolt threads to prevent binding**. Mount the controller to the plate with the 4 mounting bolts, use the supplied small diameter flat washers on the bolts to protect the plastic controllers mount lugs. Do not over tighten bolts!

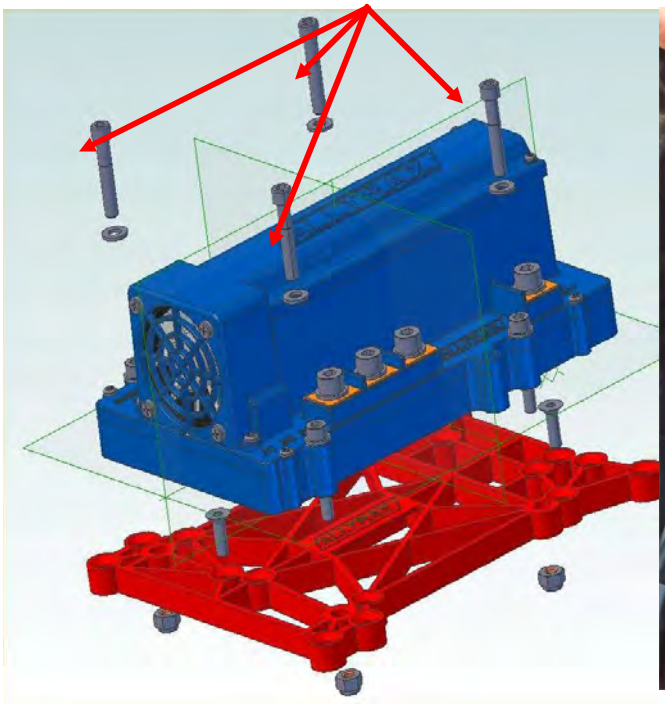

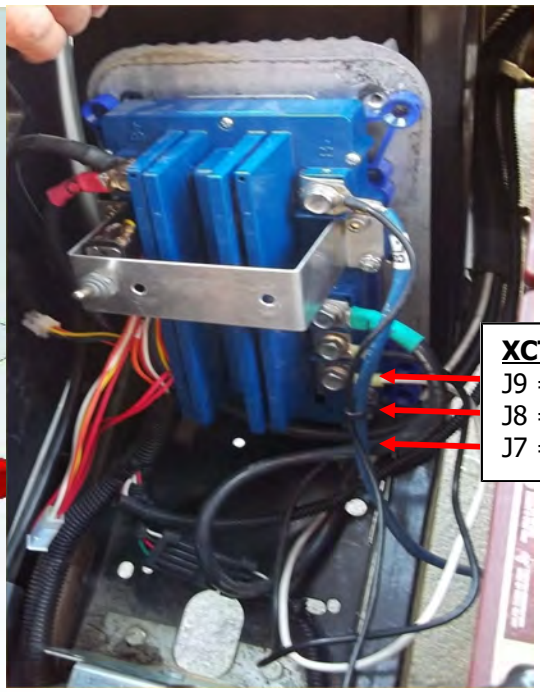

XCT WIRING:
J9 = XCT M-
J8 = XCT F2
J7 = XCT F1

© Alltrax Inc. 2016
All Rights Reserved

3. WIRING SR and XCT:

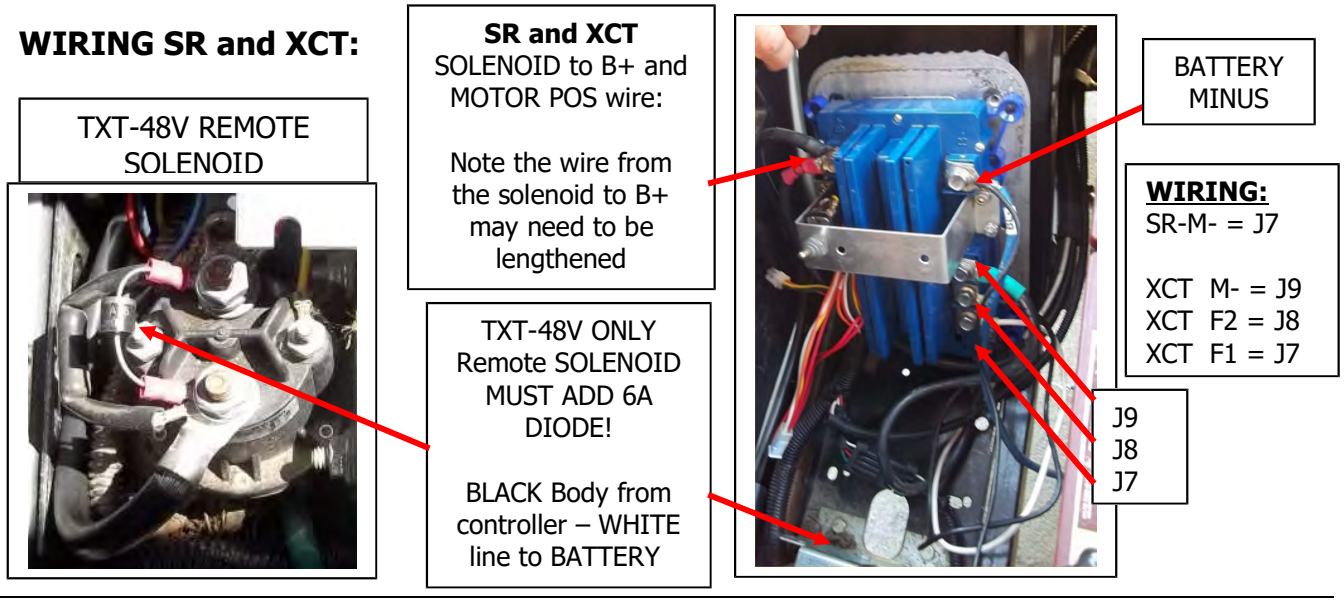

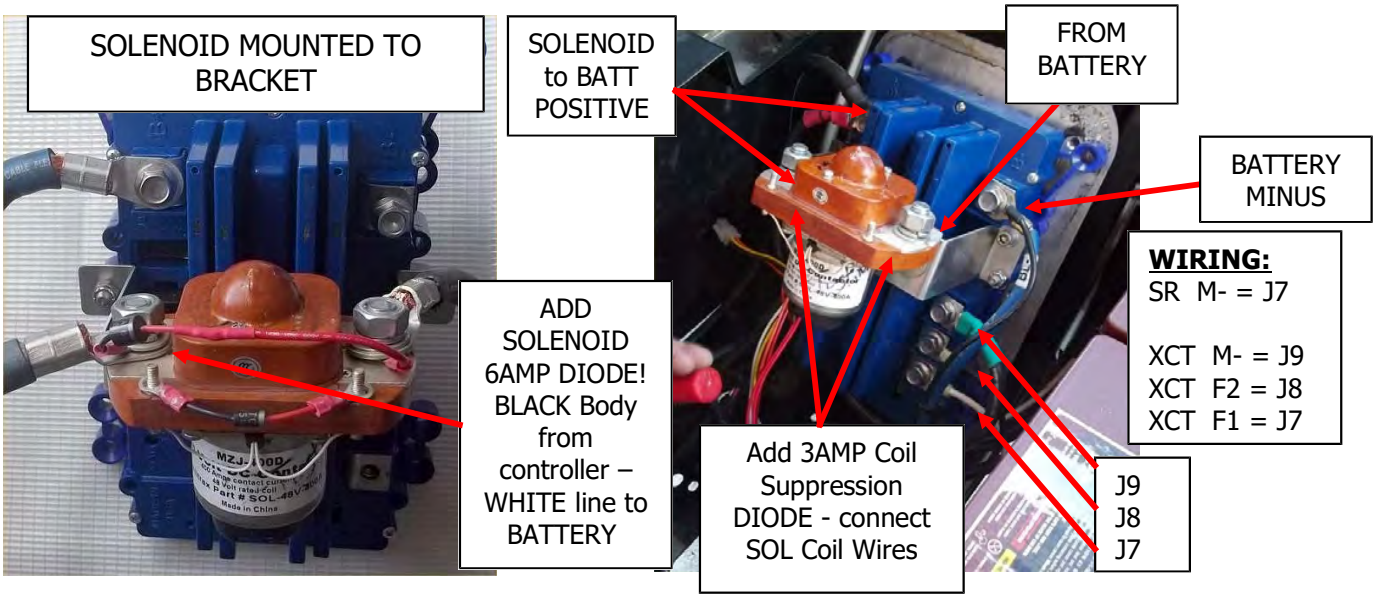

1. Connect the wiring as shown. It may be necessary to cut the cable ties holding the YDRE wire harness to fit the new plug location and main terminal locations. Add zip ties as necessary to prevent wiring chaffing.

Terminal	Function	
B+	XCT & SR = Battery Positive from Solenoid AND Motor Positive connected to the same terminal	
B-	XCT & SR = Battery Minus	
J9, M-	XCT Motor Negative	J9 = SR Empty not used
J8, F2	XCT FIELD coil F2	J8 = SR Empty not used
J7, F1	XCT FIELD coil F1	J7 = SR M- Motor Negative

Note: If the cart goes in the opposite direction (i.e. it drives in reverse with switch in forward) then XCT: reverse F1 and F2 field coil wires, for SR: reverse S1 & S2.

Revision: D – Added XCT & SR Definitions EC-07-14-2016 Author: Tony Thorne, Engineering, Alltrax Inc.

© Alltrax Inc. 2016
All Rights Reserved